CENAVA®
Ultra-Rugged, More Secure Handheld Terminals

Ex ib IIC T4 Gb MA KA Ex IECEx

Powerful & Rugged Tablet A10ST 4G

Product Protection

- Dustproof, waterproof, shockproof, explosion-proof

Android13 WiFi-5 CPU GPS Camera

NFC Interface ODM ID ODM 1D/2D ODM

Large Battery

- 10000mAh, high-capacity battery

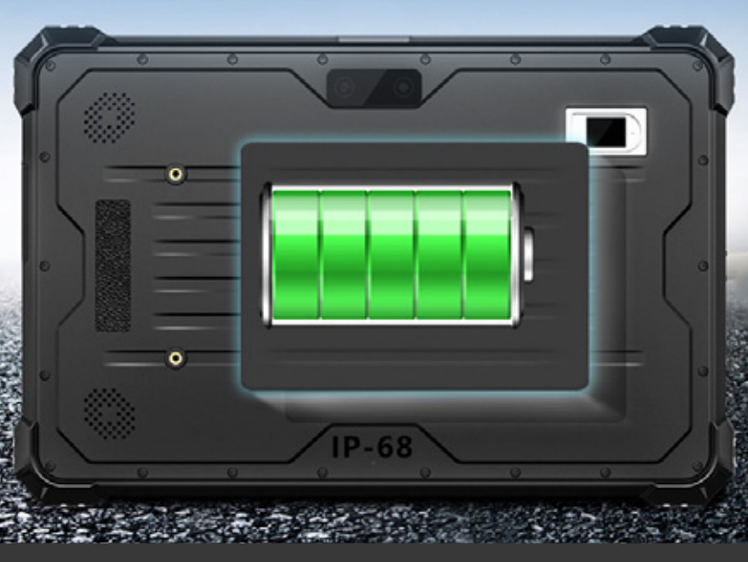

Configuration

- CPU MTK8781，8-core，2.2GHZ

Wireless network

4G: One Step Ahead

Temperature

- Withstands Extreme Temperatures: -20 ° C to +60 ° C

Positioning

- Optional GPS, BeiDou Galileo, GLONASS

Camera

- Front camera:8MP
  Rear camera:16MP

CENAVA® A10ST 4G Product Specifications

MSDS RoHS UN38.3

Product form

Configure	FHD Highlight 8+128G/12+256G
Customized	HD Highlight 8+128G/12+256G
Size /weight	Bare dimensions：283.9*189.0*24.1mm/1130g In packaging：371*213*61mm/1720g
Box specifications	Quantity: 10pcs/carton；Dimension： 38.5*33*44.5cm；Gross Weight：18.1kg
Wall hole pitch / screw	154x71.5mm/ M3*4.5mm
Color	Black，color customizable
Screen size	10.1inch，16:10
Resolution	IPS 1920*1200 (optional 1280*800)
Screen brightness	700cd/m², can be customized1000cd/m²
Tp touch screen	10-point touch G+G Corning Gorilla Glass 3, hardness 7H
Battery	10000mAh, 3.8v high voltage lithium battery, non-removable, battery life ⩾ 10h (playing 1080P HD video, 50% brightness and 50% sound)Battery life ⩾6h (playing 1080P HD video, 100% brightness and 100% sound) Supports custom large battery (20000mAh/3.8V, Optional Single-System BeiDou Positioning)

Data collection

1D/2D scanner (custom function)	Standard version (N1) 0.3M pixels + depth of field Code 39 5mil 65~150mm + red light Reading code system: 2D: PDF417, QR Code, Micro QR, Data Matrix 1D: Code 128, EAN-13, EAN-8, Code 39, UPC-A, UPC-E, Codabar, Interleaved 2 of 5, ITF-6, ITF-14, ISBN, ISSN, Code 93, UC-C/EAN- 128, GS1 Databar, Matrix 2 of 5, Code 11, Industrial 2 of 5, Standard 2 of 5, AIM128, Plessey, MSI-Plessey High-end version (N670) 1.0M pixels + depth of field Code 39 5mil 45~200mm + cross laser Read code system： ： 2D：QR Code, Data Matrix, PDF417，Han letter code，Dotcode 1D：UPC-A, UPC-E, EAN-8, EAN-13, ISBN, Code 128, GS1 128, ISBT 128, Code 39, Code93,Code 11, Interleaved 2 of 5, Industrial 2 of 5,Matrix 25, Standard 25, Codabar,M-SI/MSI PLESSEY, GS1 DataBar OCR：Support OCR-A，OCR-B
ID (Customisation)	ID card reader module
UHF (ODM)	(optional) distance1：⩽3M，Service frequency 840-960MHz distance2：⩽5M，Service frequency 860-960MHz distance3：⩽15M，Service frequency 840-960MHz
LF (ODM)	support 125kHz distance：1-3cm
Fingerprint (ODM)	1: Ordinary industrial fingerprint 2: Fingerprint certified by the Ministry of Public Security 3: FBI certified fingerprint
Intercom handset (ODM)	Customized optional aviation plug or serial port connection
RTK High-Precision Positioning (ODM)	Positioning Accuracy Standalone (RMS): Horizontal 1.5 m Vertical 2.5 m DGPS (RMS):Horizontal 0.4 m Vertical 0.8 m RTK (RMS):Horizontal 1 cm + 1 ppm Vertical 1.5 cm + 1 ppm

Mainboard reserved expansion interface

Extension Interface	3.3V-1A/5V-1A power supply, UART interface, interface level 3.3V, USB2.0 interface,5V 1A power supply

Other

Adapter	5V/3A，DC interface adapter
Accessories	Strap/Charging Dock/Stand (optional)

Explosion-proof information

Explosion-proof version (optional)	EX Class II Petrochemical Explosion-Proof, KA Class I Mining Safety Explosion-Proof, MA Class I Coal Mine Safety Explosion-Proof

Hardware configeration

Speaker, receiver, microphone	(speaker 2W/8Ω)*2 ，MIC*1，receiver*1
CPU	MTK8781，octa core，2.0GHZ
RAM/ROM	8+128GB /12+256GB
Gravity sensor	Support
compass	Support
Gyro	Support
Light sensor	Support
Distance sensor	Support

System

System	Android 13

camera

camera	Front camera: 8MP fixed focus (custom16MP) Rear camera: 16MP auto focus 1A true flash

Buttons

Buttons	Power button*1，Volume keys*2 (Vol+，Vol-) Custom keys*2 (P key, F key)

Wireless connection

WIFI	WIFI 802.11(a/b/g/n/ac) Frequency 2.4G+5.8G Dual frequency WIFI
Bluetooth	BT 5.2 (BLE) class1 transmit distance:10m
2G/3G/4G	GSM: B2/B3/B5/B8 WCDMA: B1/B2/B5/B8 TD-SCDMA: B38/B39/B40/B41 CDMA2000 LTE-FDD: B1/B2/B3/B4/B5/B7/B8/B28/B66/B71 LTE-TDD: B38/B39/B40/B41
Positioning	GPS, Beidou, Galileo, GLONASS， Optional Single-System BeiDou Positioning
NFC	I²C interface, 13.56MHZ supports 14443A/14443B/15693 and other protocols, which is consistent with the NFC application of Android phone type (The card reading area is default on the back of the fuselage and can be customized in the front)

Ports

Type -C	*1，Type-C USB2.0 adapt OTG
Type -A	*1，Type-A USB2.0
Earphone Jack	*1，3.5mm Standard Earpiece jack
TF Card	*1，Maximum support 256GB expansion
SIM Card	*1，Standard Micro SIM card slot
DC jack	*1，5V/3A 3.5mm
POGO pin	*1 ,12Pin USB+Charge
RS232	*1 ，(serial port)

Product reliability

Drop height	Meets the requirements of (GJB 150.18A-2009, GJB 150.1A-2009) and (MIL-STD-810H) for the 1.22-meter drop test
Working temperature	-20℃~60℃ (Custom-30℃~60℃)
Storage temperature	-30℃~70℃ (Custom-40℃~70℃)
Humidity	Humidity: 95% Non-Condensing
Certificates	IP68, 3C, CE, US military standard-810H certification,energy saving certification, ISO quality certification system, ROHS, three-proof salt spray test

Product Highlights

01 10.1-inch screen

IPS 1920*1200 700cd/m²

Featuring a 10-inch touchscreen with core performance tailored to practical requirements: supports operation with medical rubber gloves and adapts to high-frequency use across multiple scenarios. Screen hardness ⩾7H ensures scratch and wear resistance, minimising marks during prolonged use. Standard specifications include 1920×1200 high-definition resolution and 700 cd/m² high brightness, maintaining clarity even in bright light environments without requiring shaded operation. Flexible customisation options are also available: Optional 1280×800 standard displays balance cost, while 1000cd/m² ultra-bright screens can be customised for extreme glare conditions. Wet-hand touch functionality is also available for humid working environments.

02 High-capacity battery

10000mAh/ 3.8V

10,000mAh/3.8V high-voltage lithium battery with intelligent battery management system, precisely regulating charge and discharge cycles to effectively prevent overcharging, over-discharging, and low-temperature power depletion, thereby extending battery cycle life. Under 1080P HD video playback conditions (50% brightness + 50% volume), it delivers ⩾10 hours of runtime, providing reliable endurance support. For demanding outdoor surveying operations, a bespoke 20000mAh/3.8V high-capacity battery solution is additionally available, delivering robust power support tailored to diverse operational requirements.

03 Robust Design

IP68 protection

Certified to IP68 protection standards and tested for 1.2m free-fall drops, it withstands harsh environments including damp and dusty conditions. Strictly conforming to both Chinese and US military standards for product durability, it operates across an ultra-wide temperature range of -20 ° C to 60 ° C. Customisable explosion-proof versions are available, certified to domestic petrochemical, coal mine, and mining safety standards, alongside international ATEX and IECEx explosion-proof certifications. This ensures reliable equipment operation in extreme hazardous scenarios such as chemical plants and mines, meeting critical operational requirements and providing dependable safety support for hazardous tasks.

04 Customised Services

Multiple modules available

We provide professional and robust module customisation services, enabling precise tailoring of core components including 1D/2D barcode scanning, UHF/HF/ low-frequency radio frequency modules, ID card recognition modules, fingerprint capture modules, and RTK high-precision positioning modules. These solutions are deeply tailored for diverse industry scenarios including mining, manufacturing, transportation, healthcare, and surveying, precisely addressing core operational requirements such as identity verification, data collection, and location tracking. Additionally, we provide end-to-end private module installation services to resolve specific pain points in specialised scenarios.

Interface

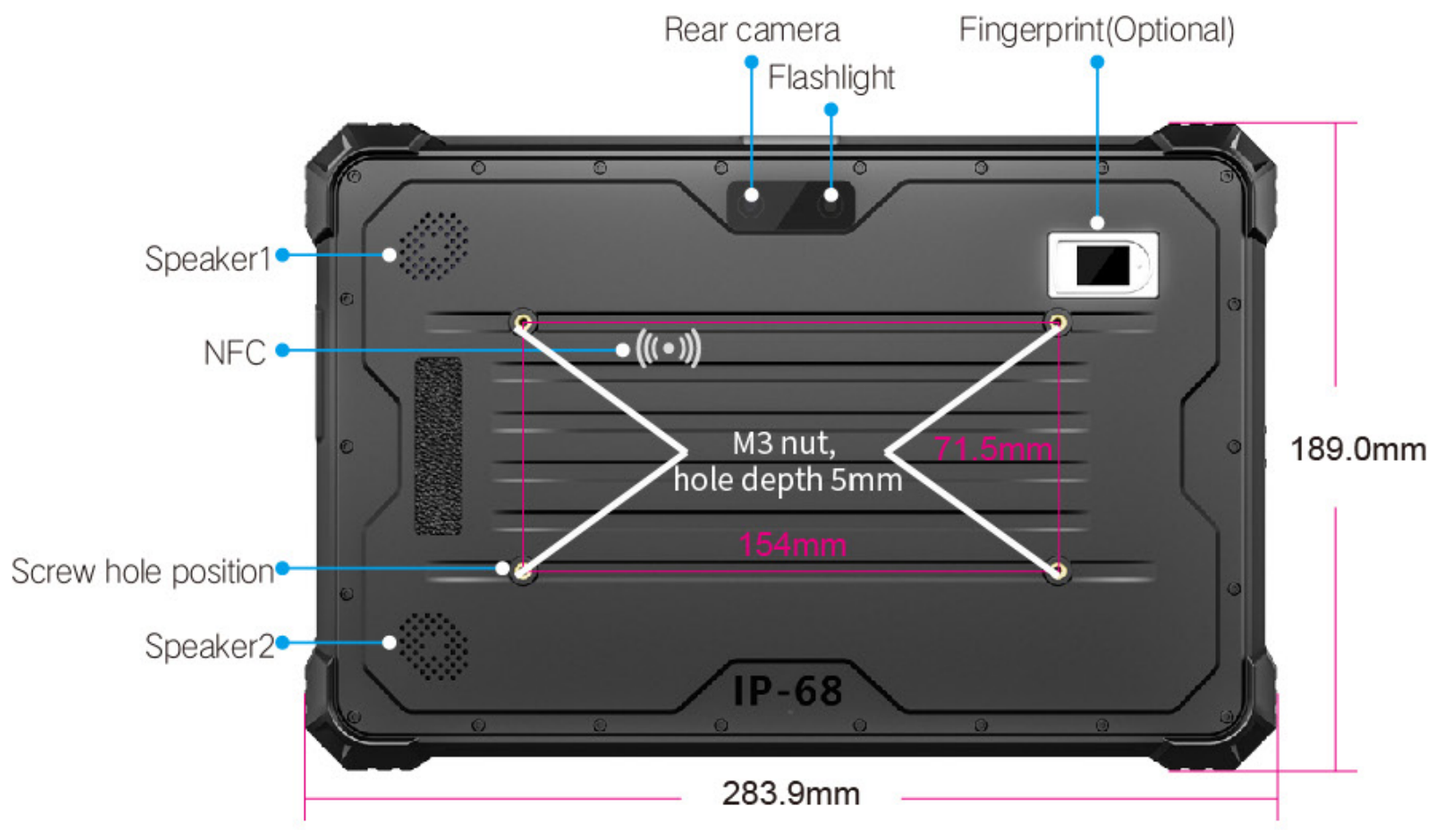

Manual measurements are subject to error; the actual product shall prevail

Usage Scenarios

Accessories

Two-point harness (optional)

Two-point carry handle (optional)

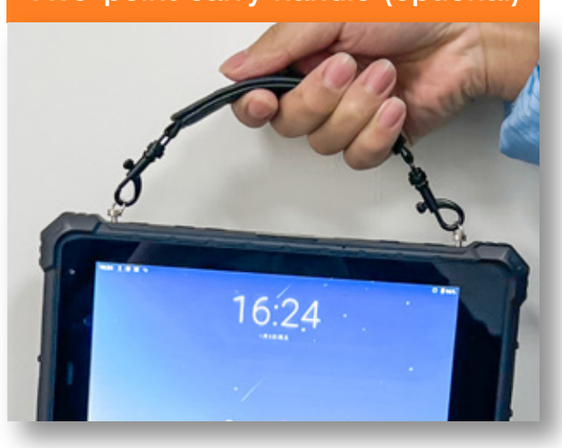

Vehicle mount (optional)

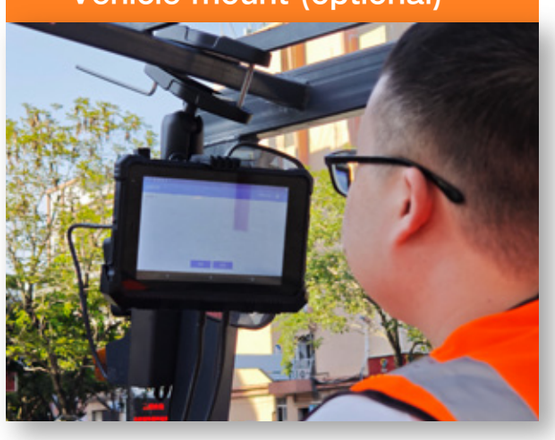

Leather case (optional)

Crossbody bag (optional)

Four-point harness (optional)

Charging dock (optional)

CENAVA®
Ultra-Rugged, More Secure Handheld Terminals

Shenzhen Chenxiang Intelligent Technology CO.,LTD https://www.cenavapc.com
Telephone/WhatsApp: +86 134 2375 9197 Business Email: tom@cenavapc.com
Address: 401,99-9 Dayang Road, Rentian Community,Fuhai Street, Bao'an, Shenzhen, China.
post code 518100